IPC-GS2U77C

Intel® Core™ I3/I5/I7+RK3399 processor
Rackmount PC

Features:

- Intel skylake-U Core I3/I5/I7 low-power high-performance processor+RK3399 Cortex-A72+Cortex-A53 six-core 64-bit 2.0GHz
- Sealed fanless dustproof design
- The main control unit comes standard with 4GB memory, and the maximum support is 8GB+the auxiliary unit comes standard with 4GB memory
- Main control unit 4*USB3.0, 4*USB2.0, 18*RS232, 1*HD, 1*16 GPIO
- Auxiliary unit 2*USB3.0, 6*USB2.0, 1* debugging serial port, 17*RS232, 1*HD

Specifications:

System Hardware

Chipset	Main control unit: Intel® Core I7-6500U processor Auxiliary unit: RK3399 Cortex-A72+Cortex-A53 Six-core 64-bit 2.0GHz
Memory	8GB DDR4 SO-DIMM(16GB optional) Auxiliary unit: Onboard LPDDR3 4GB (optional 2G)
Storage	256G mSATAI(64G/128G optional), 1TB 2.5寸 SSD Auxiliary unit: 64G EMMC FLASH(32G optional)
Hardware Monitor	Voltage and CPU temperature monitoring Auxiliary unit: N/A
Watchdog	0-255 seconds/classification is realized by system software Auxiliary unit: N/A
Power Supply	220V AC input

OS

OS	Windows 10、CentOS、Ubuntu, Auxiliary unit: Ubuntu 20.04

I/O Ports

USB	4*USB 3.0、4*USB2.0 Auxiliary unit: 2*USB 3.0、6*USB2.0
COM	18*RS232(1-2 RS485/RS422 optional) Auxiliary unit: 16*RS232(1*RS485 optional) +1*Debug serial port
LPT	1*LPT, Auxiliary unit: N/A
LAN	2*Gigabit network port Auxiliary unit: 1*100M network interface + 1*Gigabit network interface
Audio	1*Line-out+1*Mic-in, Auxiliary unit: 1*Line-out+1*Mic-in
Video	1*HD, can add 1*VGA Auxiliary unit: 1*HD
GPIO	16 input/16 output optional (input optocoupler isolation, output relay isolation) Auxiliary unit: N/A
Expand	1*MINI PCIe Auxiliary unit: 1*MINI PCIe
Switch	8 electric 2 optical full gigabit switch Auxiliary unit: 8 electric 2 optical full gigabit switch

Environment

Vibration Protection	5-19Hz/1.0mm amplitude; 19-200Hz/1.0g acceleration	Operating Temp.	-20℃～70℃ Surface air flow
		Storage Temp.	-40℃～80℃
Shock Protection	10g acceleration, 11ms period	Humidity	95% @40℃, non-condensing
Reliability	MTBF≥50000h; MTTR≤0.5h		

Mechanical

Dimension (LxWxH)	285mm*440.4mm*88mm	Material	SGCC fanless design
Weight	8.07kg/10.1kg(N.W./G.W.)	Installation	Rack installation
Color	black		
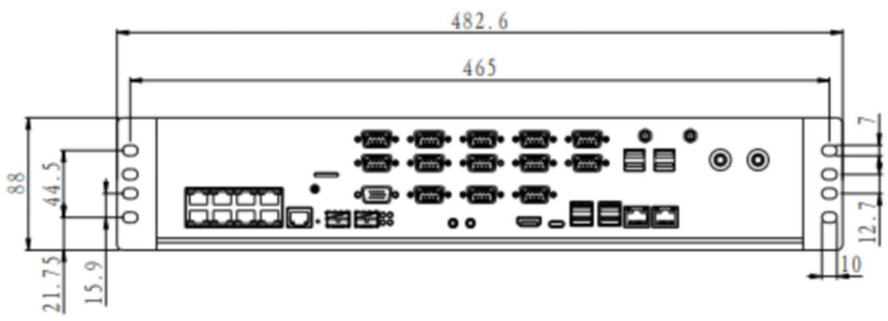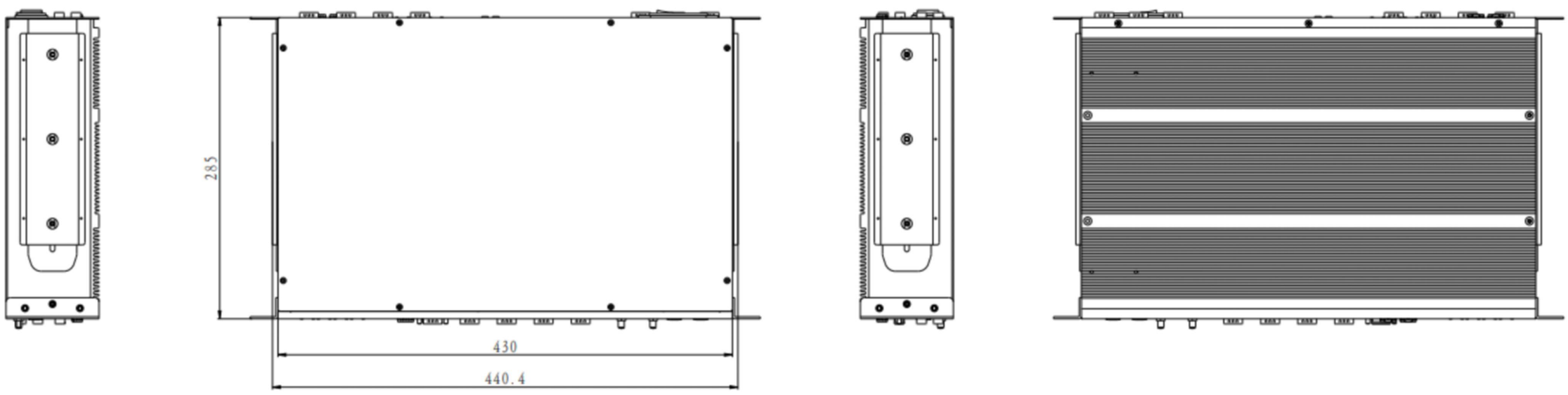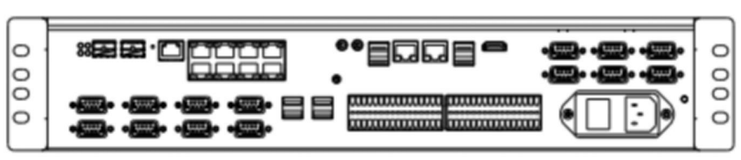
Dimensions: